COM® JDIII Series

JDIII-240・JDIII-150F

Tabletop model automatic taping machine

User's Manual

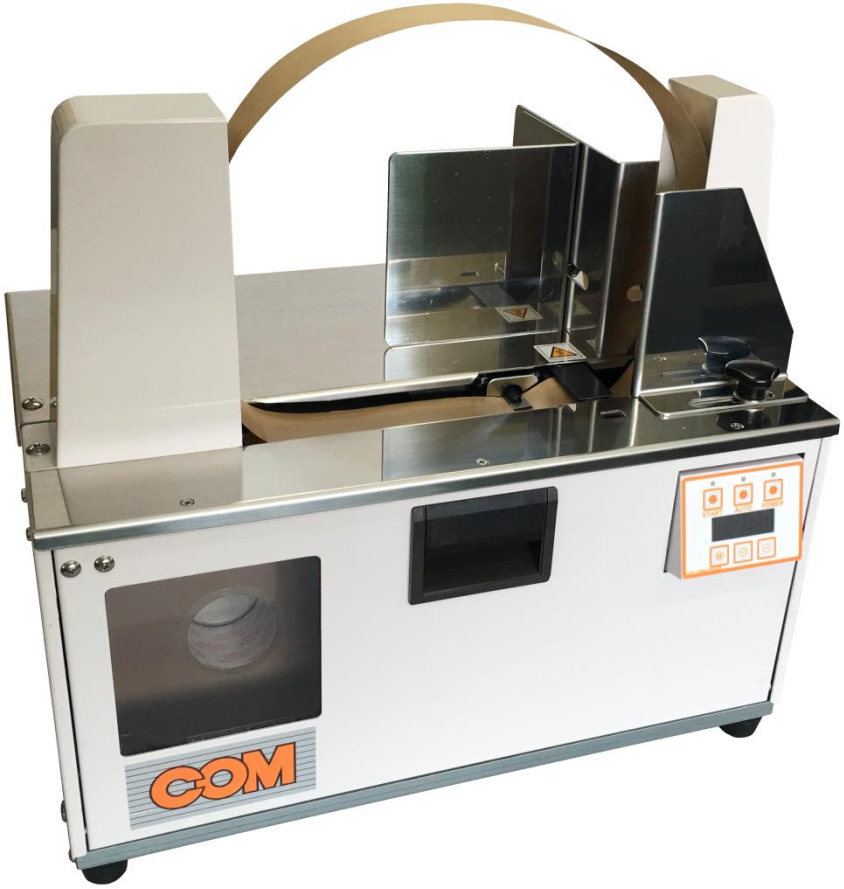

TAIYO SEIKI CO., LTD.

1. Overview and table of contents

COM® JDIII Series

JDIII-240・JDIII-150F
Tabletop model automatic taping machine

※ Not a multi-use machine. This machine should only be used for its intended purpose.
(JDIII-240) Paper tape specifications (JDIII-150F) Film tape specifications

The COM-JDIII tabletop model automatic banding machine has a very compact design so that anyone can easily and quickly perform the banding process. The COM-JDIII tabletop model automatic banding machine has a very unique feature (patent application submitted) in the construction of its tape wheel, and the portions of the machine above the work surface (table surface) have no mechanically driven components. Thus, the problems with the process of sending tape through the machine, which has been the primary source of difficulty, have been eliminated. Also, the use of a CPU in electric circuits has made the machine more dependable. Until now, banding has been time consuming, but the COM-JDIII accelerates the process and makes it more fun. For the most efficient use of the COM-JDIII, please read this user's manual.

Table of contents

1. Overview and table of contents....1
2. Introduction....2
   2-1. Safety precautions....2
   2-2. Notes on use....3
3. Components enclosed in the storage case....4
4. Assembly drawing and names....4
5. Instructions for use....5
   5-1. Content and usage rules for the switch box....5
   5-2. Preparing for operation....6
   5-3. Passing the tape through....7
   5-4. Manual operation....8
   5-5. Automatic operation....9
6. Justifying the attachments and positioning products....10
7. Adjusting the degree of tightness of the bands....10
8. Setting the mode (changing the heater temperature setting)....11
9. Problem display, error indicators....13
10. Specifications....15

2. Introduction

This device is not suitable for use where children may be present.

Prior to installation, operation, maintenance, and inspections, please read the user's manual carefully to ensure proper use and maintenance of the machine. Please ensure that you have a good understanding of all the information and important safety points. It is also a good idea to store the user's manual near the machine for quick reference.

2-1. Safety precautions

Safety precautions are given as warnings or precautions. Dangerous areas on the main unit are clearly marked.

⚠ **Warning:**	A warning means that if the machine is used improperly, the operator is at risk of serious injury or death.
⚠ **Precaution:**	A precaution means that improper use places the operator at risk of minor to moderate injury, and there could be possible damage to the materials or the machine itself in the banding process. It is also possible that unknown serious damages could occur.

Additionally, even the items listed under "precautions" could potentially lead to serious repercussions depending on the situation.
Since all of the contents in this section are important, please make sure to adhere to the warnings and precautions.

⚠ Warnings

- **In the case of smoke or strange smells/sounds, immediately stop using the machine, turn off the power switch, and unplug the device from the outlet to avoid potential electrical shock or other injuries to the operator, damage to the machine, or possible fire hazard.**
- **Never disassemble, repair, or rework the machine by yourself to avoid risk of injury or electrical shock, fire hazard, or potential damage to the machine.**
- **Do not use any power sources other than the ones that are indicated on the main unit. An improper power source could potentially cause electrical shock to the user, create a fire hazard, or damage the machine.**

- **Do not open the circuit board cover or touch the control circuit board. This prevents dangerous exposure to high voltage electrical shock.**

- **Do not open the cover of the main unit or touch the inside of the machine to avoid potentially dangerous burns, electrical shock, or other injuries.**

⚠Precautions

- Do not place or store the machine in an unstable location.
  If the machine were to fall over, it could potentially cause an injury and void the warranty.
- Do not use the machine in places where there is a lot of dust or high temperature/humidity, as such conditions increase the risk of fire or electrical shock.

- Do not put your finger in the opening.
  There is a risk of injury due to the spacer.

- Do not touch the spacer when the power is on or after it is turned off (about 60 minutes).It is hot enough to cause burns.

- Always turn the machine off after you have finished using it..

2-2. Notes on use

- Do not use any tape that is not the specified tape for this machine, as it could potentially damage the machine or make it inoperable.

- Use only the power sources indicated on the main unit, and operate the machine only in a location where there are few voltage fluctuations.

- Ensure that the operating location is level and stable.

- Perform a weekly standard cleaning of the machine to avoid causing defects in the sending of the tape. Cleaning the rollers is particularly important.

- Avoid using the machine in places with a lot of dust or high temperature/humidity because these conditions could damage the sending of the tape.

- The warranty will be voided should you repair or rework the machine by yourself.

3. Components enclosed in the storage case

1. Main machine unit ····· 1
2. Tape guide
   The metal fixture that supports the tape when the machine is set up to band tape.
   - Right tape guide (right side, narrower one) ····· 1
   - Left tape guide (left side, wider one) ····· 1
3. Attachments
   Board to adjust the position of the band when performing banding
   - Attachment A ····· 1
     (used to determine the front position)
   - Attachment B ····· 1
     (used to determine the inner position)
   - Attachment C ····· 1
     (used to determine the front and rear position)
4. Knob bolts for attachments ····· 3
5. Reserve screws (M4×2. M5×2) ····· 4
6. Cutter (reserve) ····· 1
7. Fuse (250V/3.15A×1, 250V/1A×1) ····· 2

*If are replacing a fuse, please contact us to dealer. By the customer, do not replacing.

4. Assembly drawing and names

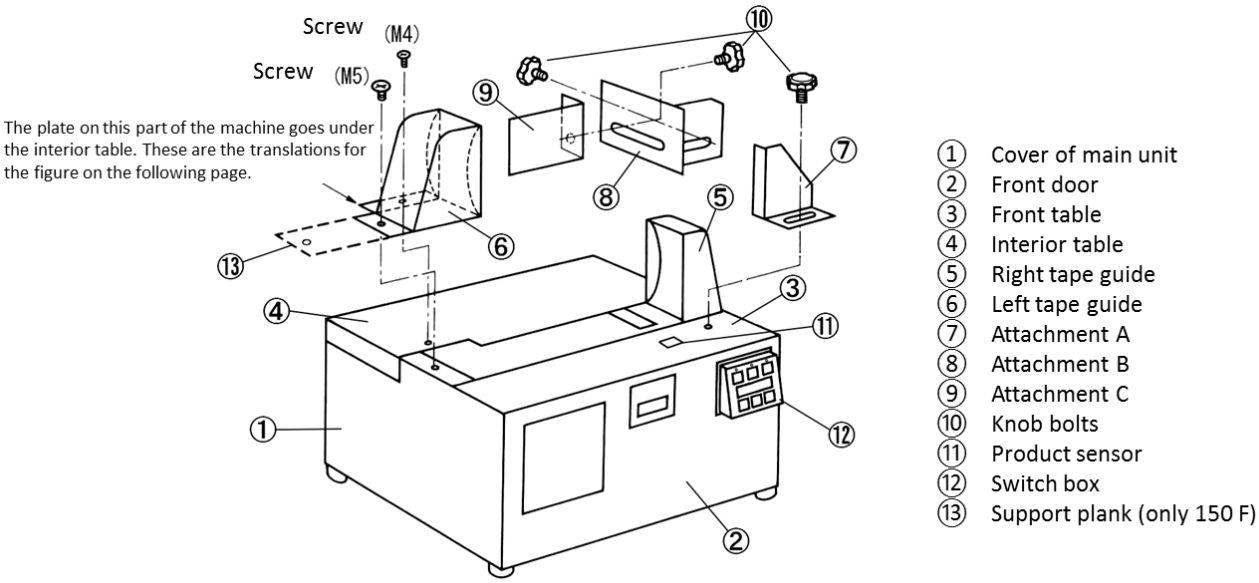

5. Instructions for use

5-1. Content and usage rules for the switch box

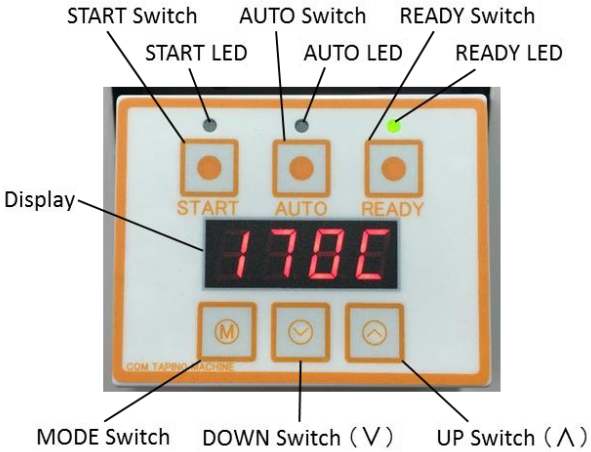

*This is a diagram of the display with illuminated and not illuminated LED.

・START switch	Used to power up the manual banding operation
・START LED	Illuminated during the banding operation; blinking when the front door is opened
・AUTO switch	Changes between manual and automatic operation
・AUTO LED	Goes off during manual operation mode; blinks during automatic operation mode
・READY switch	Not used
・READY LED	Blinks when machine is preparing for operation; lights up when the preparations for operation have been completed
・MODE switch	Each time the MODE switch is pressed, there is asequential change between the heater temperature display ⇔ and the binding counter display. When the MODE switch is held down for 3 seconds while the heater temperature is being displayed, the machine switches to settings mode. When the MODE switch is held down for 3 seconds while the binding counter is displayed, the current binding counter clears to 0.
・DOWN switch (∨)	Only used in setting mode. (see 8. setting mode)
・UP switch (∧)	Only used in setting mode. (see 8. setting mode)
・ Display	Displays the heater temperature, binding counter, problem number, and setting mode depending on the status of the machine ・ Example of temperature display：170 C *When the first column of the display is [C] it is the temperature display. ・ Example of binding counter display：1234 *The maximum number that can be counted is 10,000 units (maximum display of 9,999) It will be reset to 0 when it reaches 10,000 times or when the power is turned off.

5-2. Preparing for operation

① Insert the power cord into the inlet on the right side of the main unit, and insert the plug for the power source into the electrical outlet.

② If the power switch is switched on, the READY LED on the switch box will blink (indicating preparation for operation).
When the READY LED is illuminated, the preparation for operation is complete, and the machine is ready for use.

completion of preparations for operation

5-3. Passing the tape through

① Open the front door.
(If the power is on, the START LED will be blinking.)

② Open the acrylic plate on the tape case, and put the tape into the tape case.
(The tape runs counter clockwise. Please ensure the tape is installed to run in the proper direction.)

③ Pass the tape between the aluminum roller and the rubber roller and between the tape clamp lever and the top of the tape clamp.
Pull out approximately 80 cm of tape (see Figure 2).

④ Pass the tape through the reversal hook, and put the end of the tape into the space between the spacer and the beak. Ensure that the tape end does not protrude beyond the right side of the spacer.

⑤ If the tape that has created a loop is raised to a position slightly higher than the guide, the loop will stay intact.

When the main unit's front door and tape case acrylic plank are opened, it looks like the following diagrams.

Diagram 1

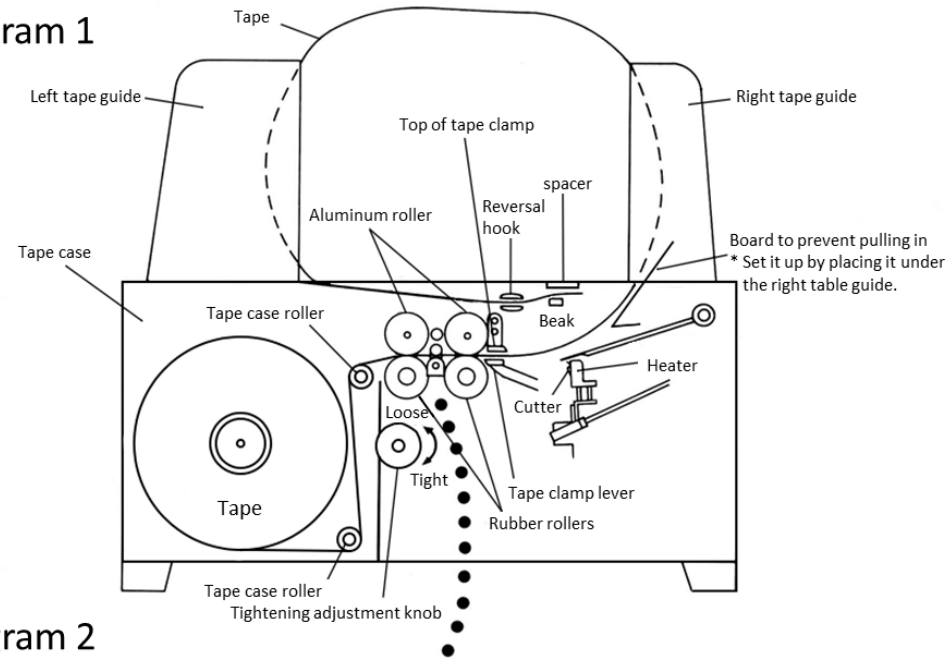

Diagram 2

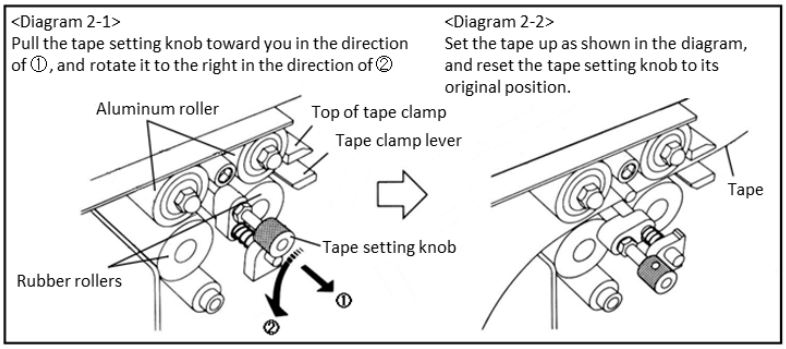

5-4. Manual operation

For manual operation, use the START switch on the switch box or the foot switch to perform binding.

*The foot switch is a special option. Please contact a store if this option is needed.

・Manual operation procedure

① Place the product on top of the table and check the position of the band.

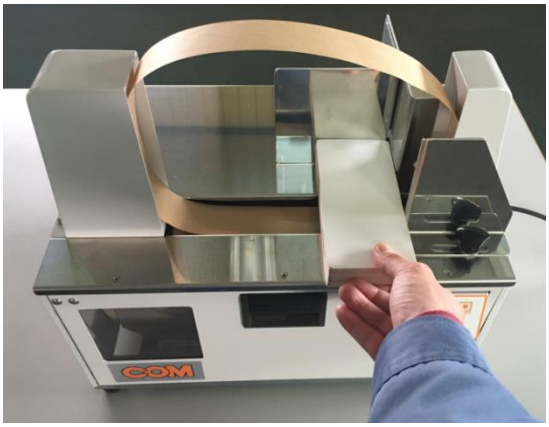

② Press the START switch or foot switch to tighten the tape. Banding is complete when the tape is fastened and cut.

③ When the product is removed from the top of the table, the next section of tape automatically forms a circle.

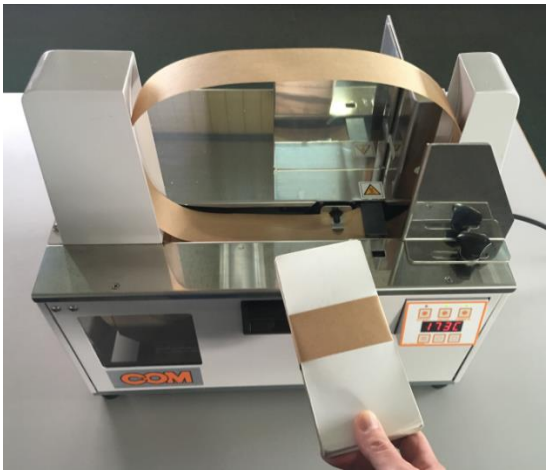

5-5. Automatic operation

For automatic operation, the product sensor on the front of the table detects a product and automatically binds it without pressing the START switch or the foot switch.

・Automatic operation procedure

① Press the AUTO switch on the switch box.

② The AUTO LED is illuminated.
(When the AUTO LED is illuminated, it indicates that the machine is in automatic operation mode.)

③ Place a product on top of the table. The product sensor automatically detects the object, and the tape is automatically fastened and cut, after which the banding is complete.
*The product sensor is on the aperture at the front of the table.

④ When the product is removed from the top of the table, the next section of tape automatically forms a circle.
Repeat procedures ③ and ④ to band products automatically in continuous succession.

⑤ When the automatic operation is completed, press the AUTO switch on the switch box. This shuts the AUTO LED and switches the machine to the manual operation mode.

6. Justifying the attachments and positioning products

① Use the proper attachment based on the size of the product and the position of the band.

② Place the right end of the product further to the right than the dotted line on the right side of the spacer.

③ The closer the product is to the right tape guide, the tighter will the band be.

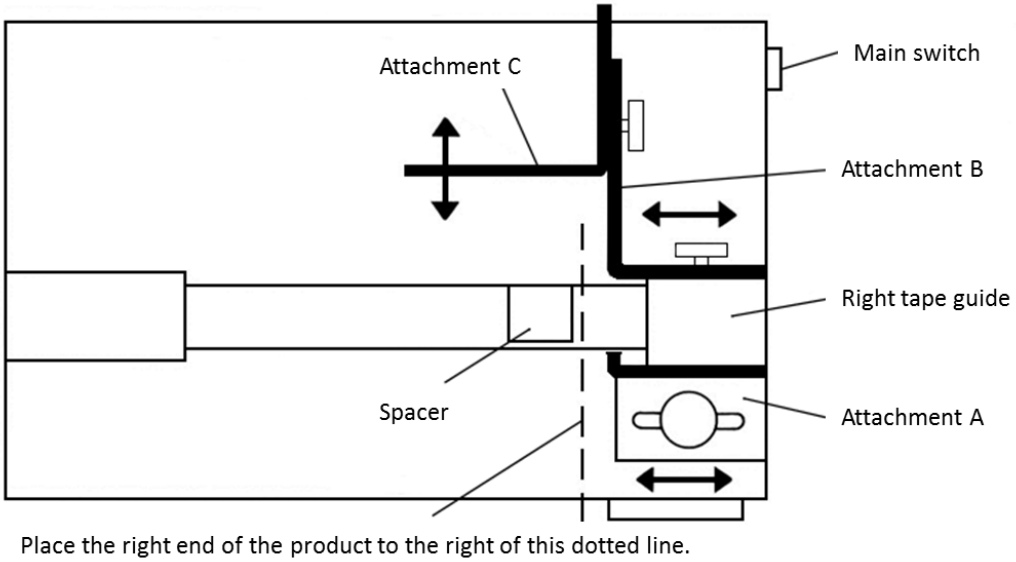

7. Adjusting the degree of tightness of the bands

・The degree of tightness of the tape

Rotate the tightening adjustment knob as shown in the below illustration to increase or decrease the degree of tightness of the binding tape on the product.

・If the product has a degree of elasticity

If the adhesive surface becomes unstuck due to a repellent force, press the tape to the product by hand for a few minutes after the adhesive cut has been completed.

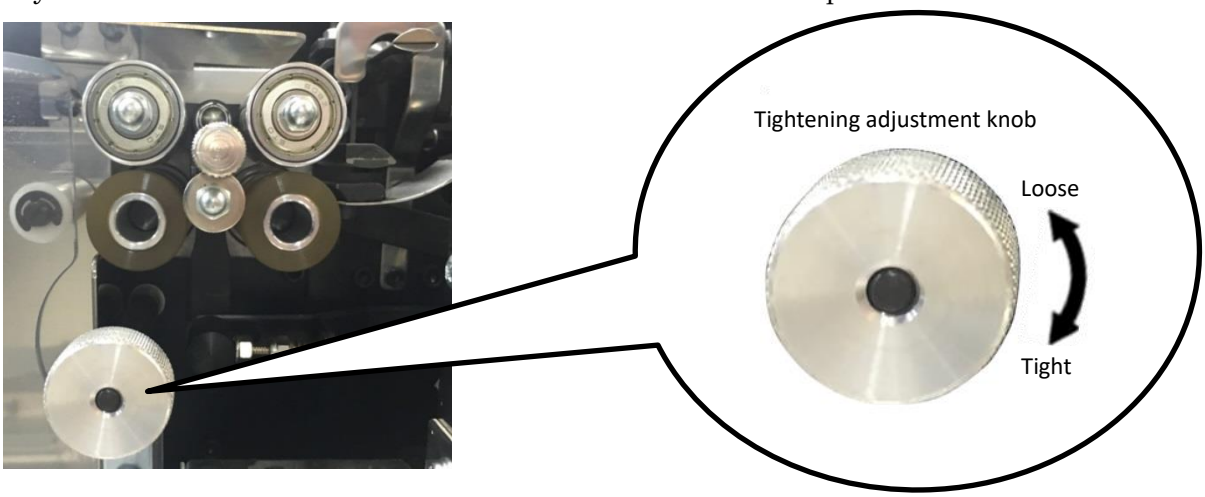

8. Setting the mode (changing the heater temperature setting)

If the glue on the tape is not completely adhesive, change the temperature setting on the heater.

① First, confirm that the switch box display is displaying the temperature.
② When it is displaying the temperature, press the MODE switch and hold for 3 seconds to access the settings mode.
③ The display should change to [C-st].
④ Now press the MODE switch and hold it for 1 second to display the current heater temperature setting.
Example of the display of current heater temperature setting: 170 C
⑤ Use the UP switch (∧) and DOWN switch (∨) to adjust the temperature settings.
⑥ Once the temperature has been reset, press the MODE switch down and hold for 3 seconds.
⑦ The display shows the current temperature, and the system exits the settings mode.

*Settings data will be saved when you switch from setting mode to normal mode.
Please note that if you turn the power off while in setting mode, any data changes you are making will not be saved.

*If you take a misstep in the operation while in the settings mode, press the MODE switch down for 3 seconds, and the machine will exit the settings mode and return to displaying the current temperature setting.

*Caution: Do not allow customers to change any settings, except the heater temperature settings (the settings in red), to avoid operational errors.
Please make inquiries with a store if any other changes are necessary.

*About bundle counter
The bundle counter counts from 1 to 9999.
When it reaches 10000 times, it will be automatically reset to 0.

If you press and hold the mode switch for 3 seconds when the display shows the band counter, the current counter will be reset to 0.

Since the bundle counter is not recorded, the current counter will be reset to 0 when the power is turned off.
The next time the power is turned on, the count will start from 0.

List of settings modes

Display 1 [Settings]	Display 2 [Values of settings]	Settings Definitions	Initial values	Notes
C-st	＊＊＊C *1	Heater temperature setting	170	1 = 1℃
Ht-r	-20~20	Heater temperature correction factor	0	1 = 1℃
AL-H	0~50	Maximum heater temperature problem setting	20	1 = 1℃
AL-L	0~50	Minimum heater temperature problem setting	20	1 = 1℃
H-rG	0~10	Range of heater temperature settings	5	1 = 1℃
H-CP	3~5	Problem with the timer for the heater temperature	5	1 = 1 minute
Ht-t	0.0~5.0	Adhesive timer	0.0	1 = 0.1 seconds
CL-t	0.0~5.0	Cooling timer	0.0	1 = 0.1 seconds
JOG	P-on	Inching mode	---	---

*1 : Places with ＊＊＊display the current temperature setting.

9. Problem display, error indicators

*If a problem occurs, a problem number is displayed. Identify the issue, turn off the power, unplug the machine from the electrical outlet, and contact the store. Unauthorized work on the machine will void the warrantee.

Problem error indicator numbers

Error Display	Issue	Possible cause	Troubleshooting
Err.1	Heater problems	・The heater is not reaching the correct temperature setting. ・The heater is not able to maintain the temperature setting. ・A breakdown or disconnection of the cartridge heater has occurred. ・The thermocouple has become disconnected.	Turn off the power switch and contact the store.
Err.2	Cycle time problems	・An operation cycle is not being completed in 3 seconds or less. ・A breakdown in the motor has occurred. ・A breakdown or disconnection of the cam sensor has occurred.	Turn off the power switch and contact the store.
Err.3	Setting data error	・Reading of setting data error has occurred.	*1 Please refer to Err.3 initialization method.
S.Err	Product sensor error	・An object is on the table when the machine is powered up, and the product sensor is dim.	Remove the product from the top of the table.

*1 Err.3 initialization method

If Err.3 occurs, please initialize the settings data per the following steps.

*Changing settings data will cause the settings data to return to factory default values.
After initialization, please change the settings data again.

Please contact the vendor if errors continue to occur after initialization has been performed.

Initialization method and procedure

① Turn power OFF, turn ON DIP switch number 7 on the circuit board.

② Turn power and wait for about 3 seconds.

③ Turn power OFF, turn OFF DIP switch number 7 on the circuit board.

④ Turn power ON, check that Err.3 has been removed.

* If Err.3 is not cleared at this time, turn the power off and on once.
If it is still not resolved,
Repeat the initialization steps 1 to 4 again and check if the error is cleared.

⑤ Changing settings data will cause the settings data to return to factory default values.
After initialization, please change the settings data again.

10. Specifications

■Machine performance

Model	Measurements of objects that can be bound	Banding capacity (minutes)
JDIII-150F	Maximum (width 150 mm, height 140 mm) Minimum (width 30 mm, height 5 mm)	25 times
JDIII-240	Maximum (width 240 mm, height 170 mm) Minimum (width 30 mm, height 5 mm)	

■Machine performance

Model tape width (mm)	Overall width	Overall height	Depth	Table height	Power source	Correct tape type
JDIII-150F-20/30	425mm	400mm	287mm	230mm	220V, 230V, 50/60Hz	Film
JDIII-240-20/25/30						Paper
JDIII-150F-40	435mm		300mm			Film
JDIII-240-40						Paper

■COM tape standards

Tape variety	Tape width	Thickness
Paper	20mm / 25mm / 30mm / 40mm	Brown 70 g / white 80 g
Film	20mm / 30mm / 40mm	80 μ / 100 μ / Magic cut

*Please use the specified tape.

■Footswitch cable (Option)

Cable length	Cable type
2.0m	Shielded

WARRANTY

Taiyo Seiki Co., Ltd. warrants its products to be free from defects in material and workmanship for a period of one year from the date of shipping invoice, provided Taiyo Seiki Co., Ltd. sizes or approves application of the product. Within the warranty period, Taiyo Seiki Co., Ltd. will repair or replace such products which are returned to it with shipping charges prepaid and which are disclosed as defective upon examination by Taiyo Seiki Co., Ltd. This warranty will not apply to any product which has been subject to misuse, negligence or accident, or use not in accordance with Taiyo Seiki Co., Ltd.'s instructions or authorized agent or employees of Taiyo Seiki Co., Ltd.

The provisions of the warranty are the sole obligations of Taiyo Seiki Co., Ltd. and exclude all other warranties expressed or implied, including any warranties of merchantability. There are no warranties which extend beyond this warranty.

Taiyo Seiki Co., Ltd. shall not be liable for any consequential damages, either in law or in equity, or for losses or expenses or claims for the same arising from the use of, or inability of use, the products of Taiyo Seiki Co., Ltd. for any purpose whatsoever.

Warranty becomes void if any alteration or deletion is made on any product of Taiyo Seiki Co., Ltd. name, trademark, patent and or serial numbers.

Taiyo Seiki's continuing commitment to product improvements will make specifications subject to change without notice.

This warranty is governed by the laws of Japan.

Warranty subject to change without notice.

TAIYO SEIKI CO.,LTD.

Head Office: 4-3-7, Hino, Daitoh, Osaka, 574-0062, Japan.
Phone: 81-72-873-3739 Fax: 81-72-875-4324
U R L: http://www.com-machine.co.jp
E-mail: taiyo@com-machine.co.jp

TAIYO SEIKI CO.,LTD.

Head Office: 4-3-7, Hino, Daitoh, Osaka, 574-0062, Japan.
Phone: 81-72-873-3739　Fax: 81-72-875-4324
U R L: http://www.com-machine.co.jp
E-mail: taiyo@com-machine.co.jp

0-260515